Performance and occupancies in a CCD vertex detector with endcaps

Toshinori Abe and John Jaros

04/21/04

Introduction

- Motivation:

  Extend barrel tracking philosophy forward

  1. Better vertexing at forward region
  2. Extrapolate tracks to forward disks for momentum measurement and reliable extrapolation to the calorimetry.
  3. Pattern Recognize in 5 Layers of CCD
  4. Global Pattern Recognition to follow

Current working issue

- We need to make sure the feasibility of this idea.
- At this point, we are working on the following issues.

1. Endplate layout
2. Performance
3. Occupancies and radiation damage

Endplate layout

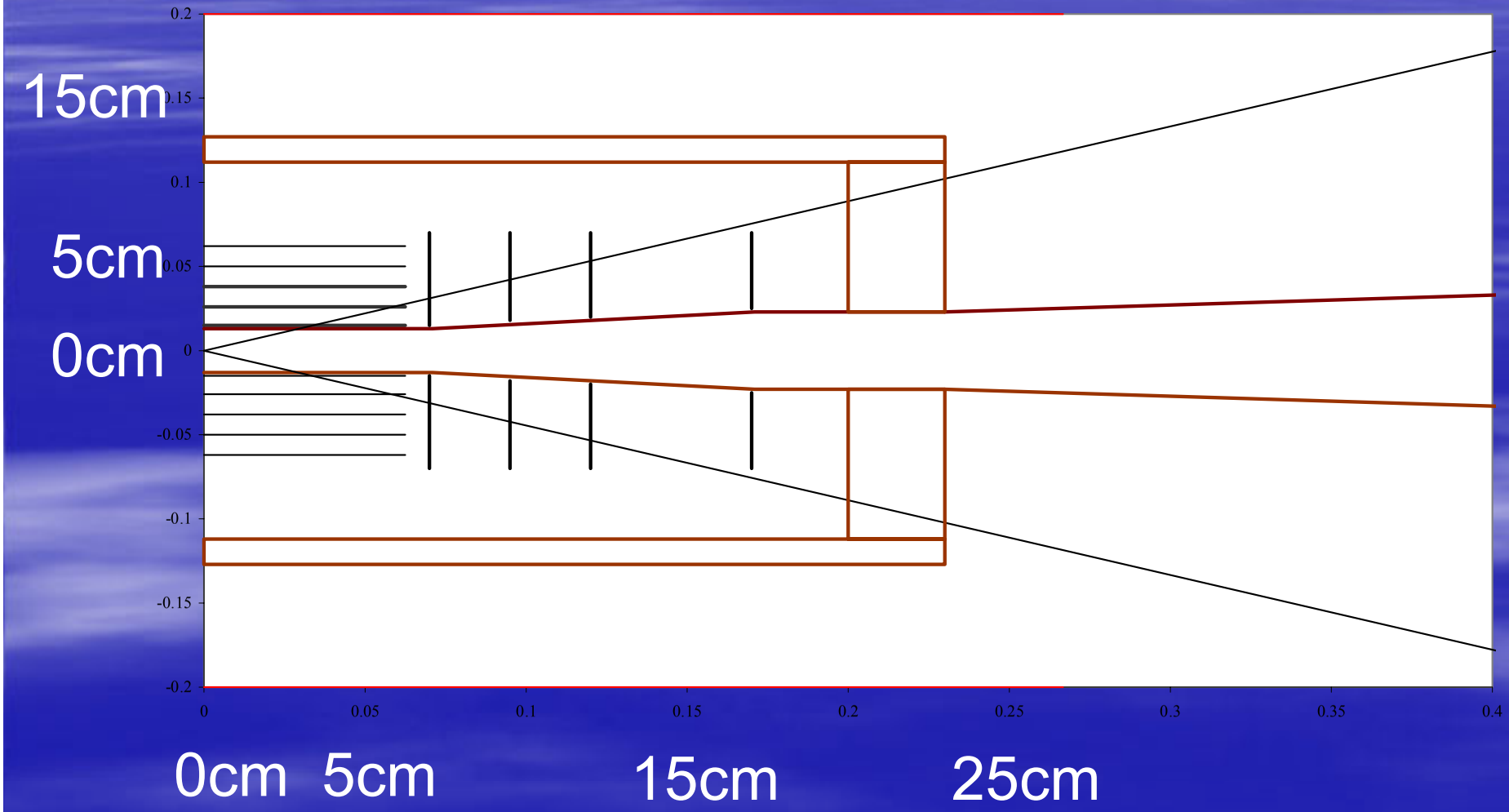

Design concept

- Extend 5 layer tracking over max Ω

  →Ω Coverage

5 CCD layers	.97	(vs. .90 TDR VXD)
4 CCD layers	.98	(vs. .93 TDR VXD)

- Minimize CCD area/cost

  → Shorten Barrel CCDs to 12.5 cm (vs. 25.0cm)

- Thin the CCD barrel endplate

  → a single 300 μm Si disk for self supporting

Performance study

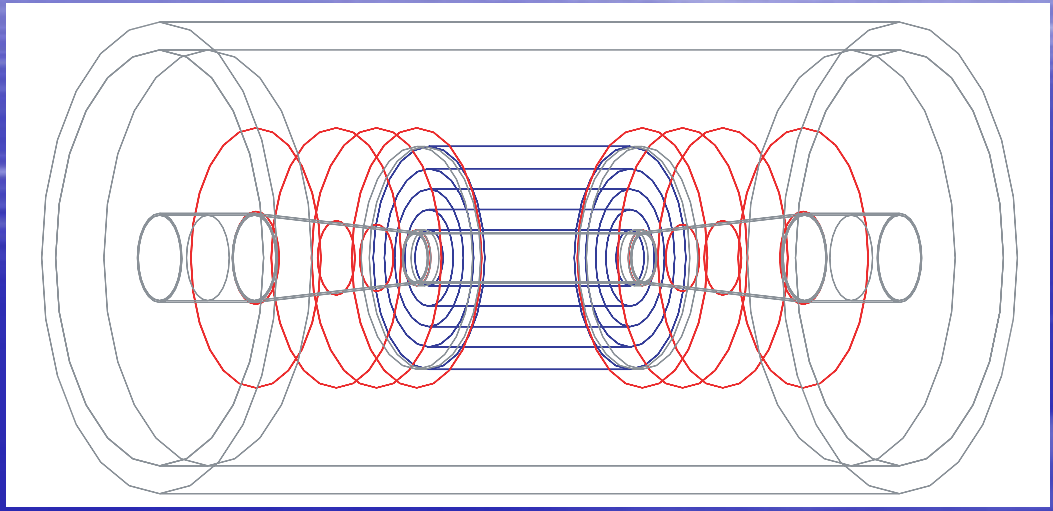

- Full detector simulation for reality.
- Generate single muon track for 2GeV, 20GeV, and 200GeV as a function of cosθ.
- Do Kalmann filter fit.
- Study momentum resolution, impact parameter resolution, and dip angle resolution.

Momentum and dip angle resolution

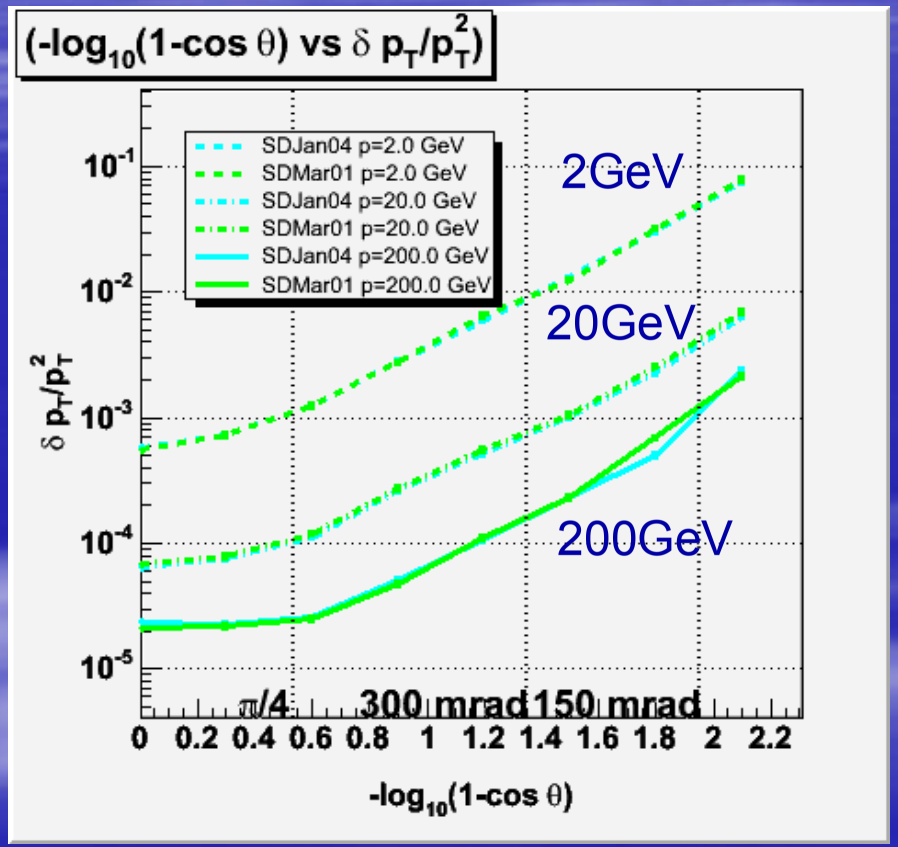

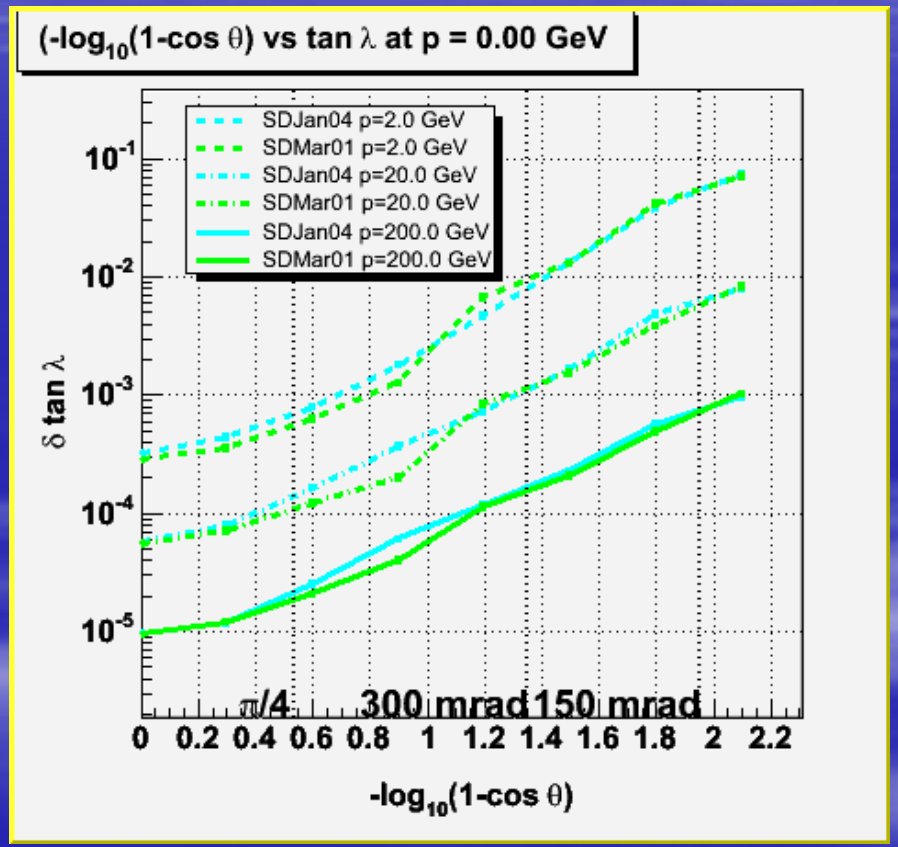

Almost same performance.

Impact parameter resolution

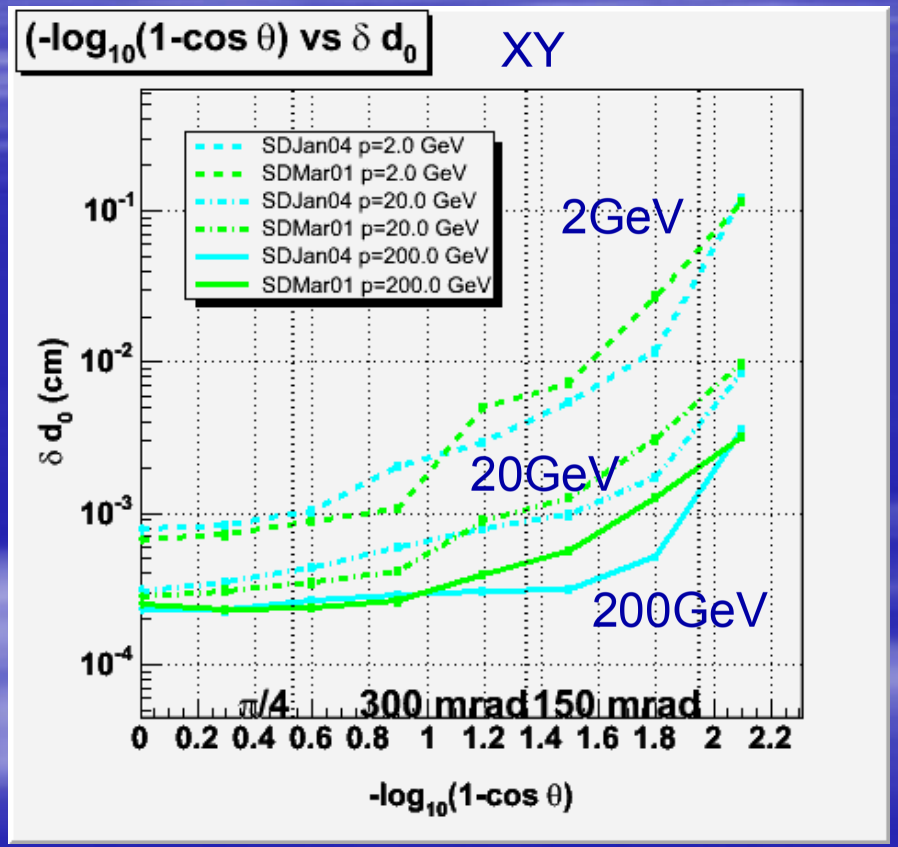

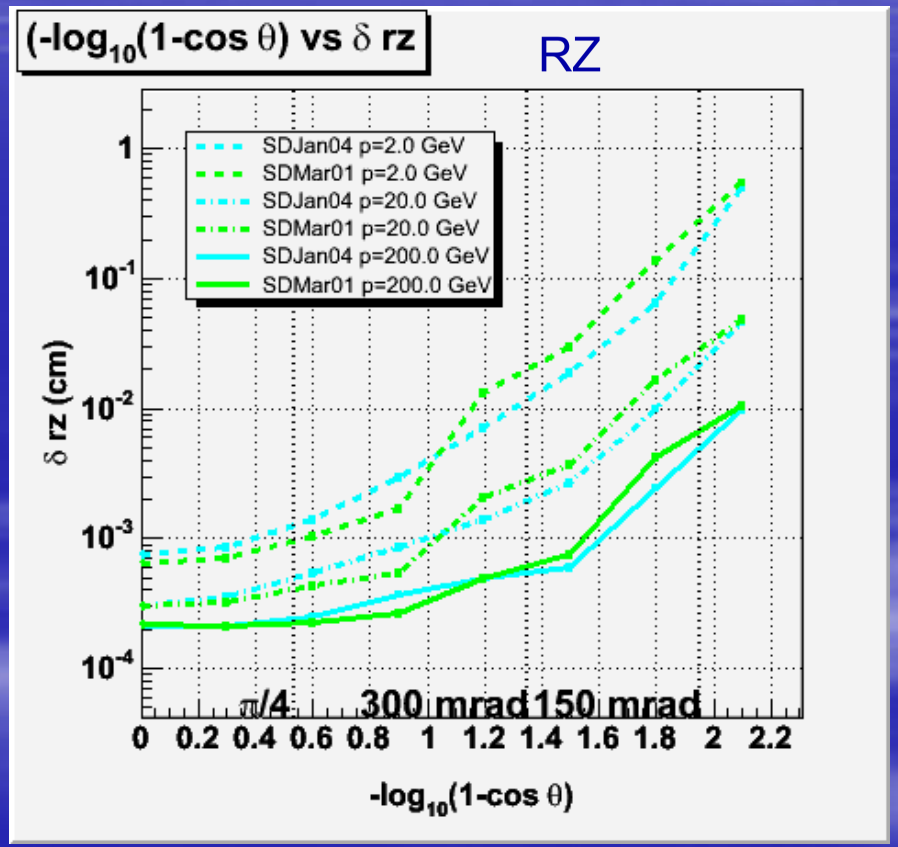

Better performance at the forward region.

Tracking performance with endplate

- Momentum and dip angle resolutions are same as previous design.

  → These resolutions are dominated by lever arm than VXD.
- Impact parameter resolutions are significantly improved both of low and high momentum region.

  →Do we get better heavy flavor jet tagging at forward region than before?

B-tag performance

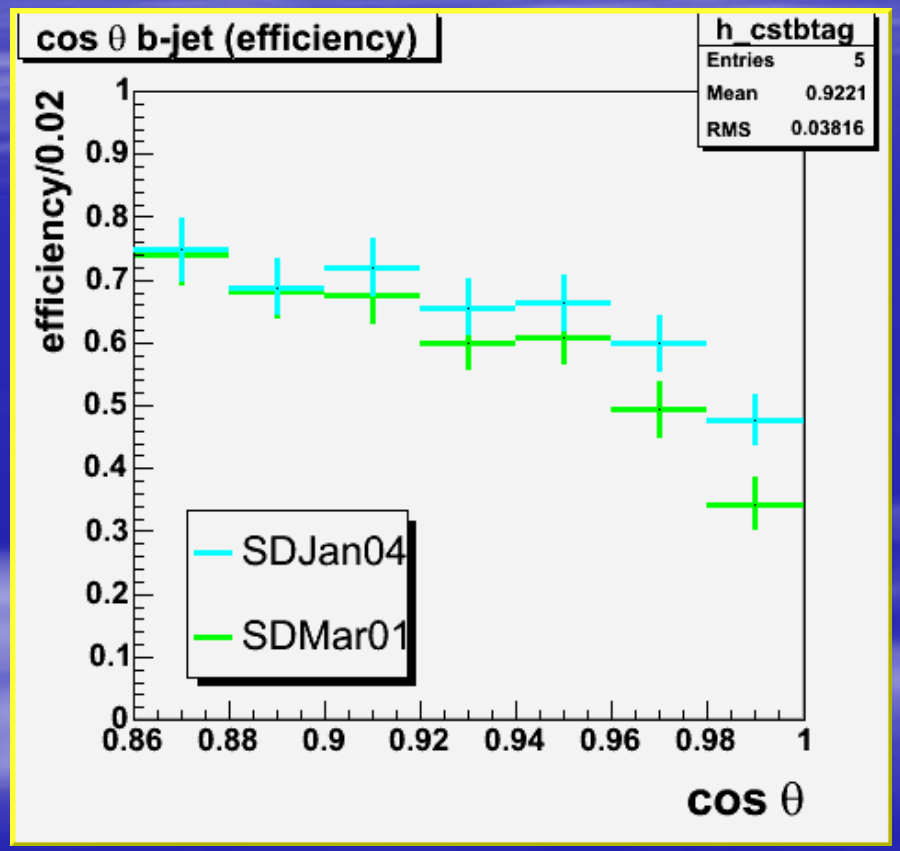

- $Z^0 \rightarrow q$ q-bar @Ecm~91GeV
- Topological vertexing + P_T corrected mass tag (no optimization)
- Better b-tag performance at the forward region

Occupancy study setup

- One big question for endplate vertex detector is occupancy (and S/N ratio).
- We study it taking account to the following signal and backgrounds at $\sqrt{s}$=500GeV:
  1. $e^+e^- \rightarrow$ t t-bar (Pandora Pythia)
  2. Photons (Takashi)
  3. e^+e^- pairs (Takashi)
  4. $\gamma(*)\gamma(*) \rightarrow$ hadrons (Tim)

  (Backgrounds are overlaying per a train.)
- We use full detector simulation with NLC beam condition (192 bunches per train).

Endplate occupancies

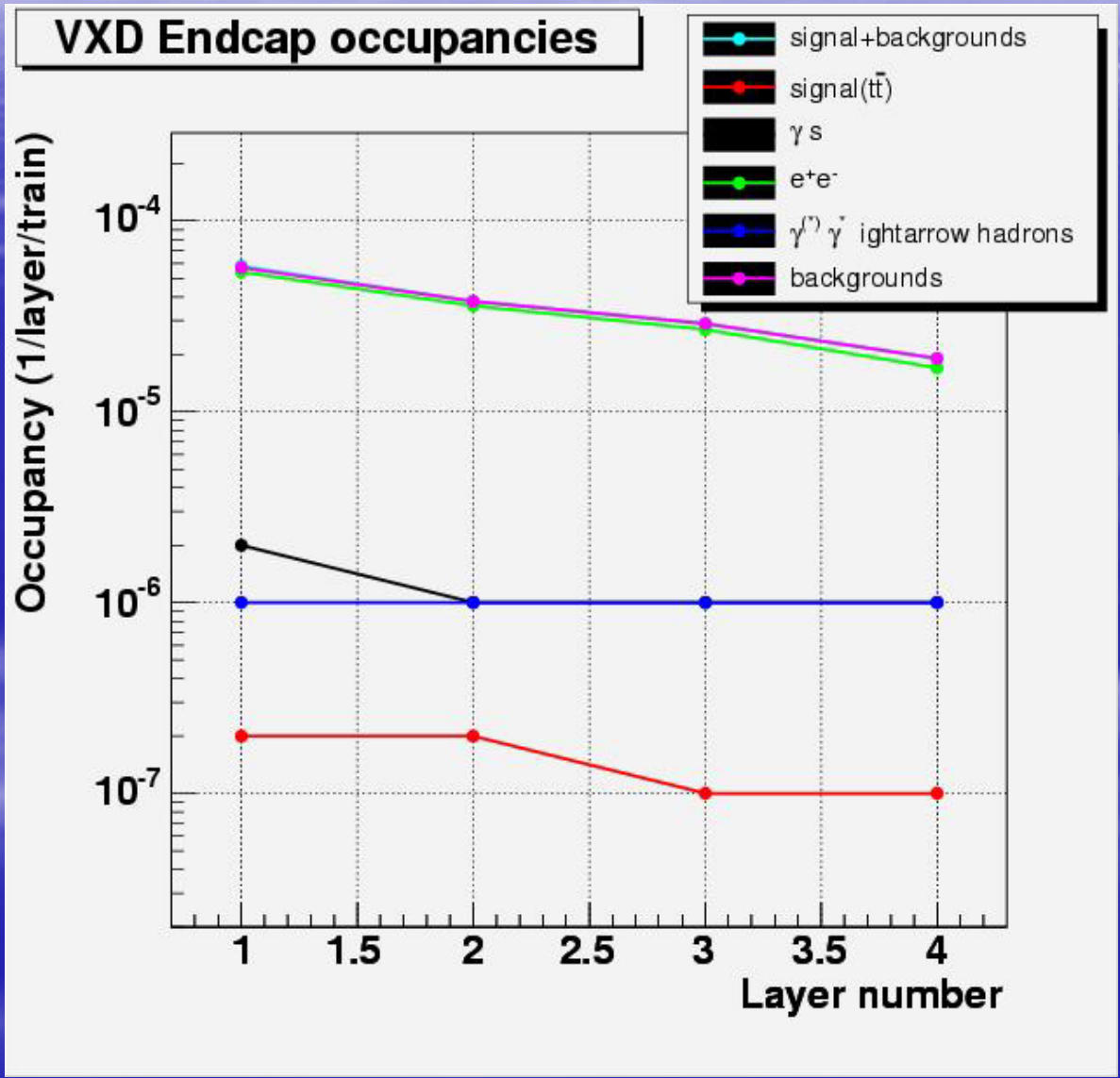

Occupancies vs. R

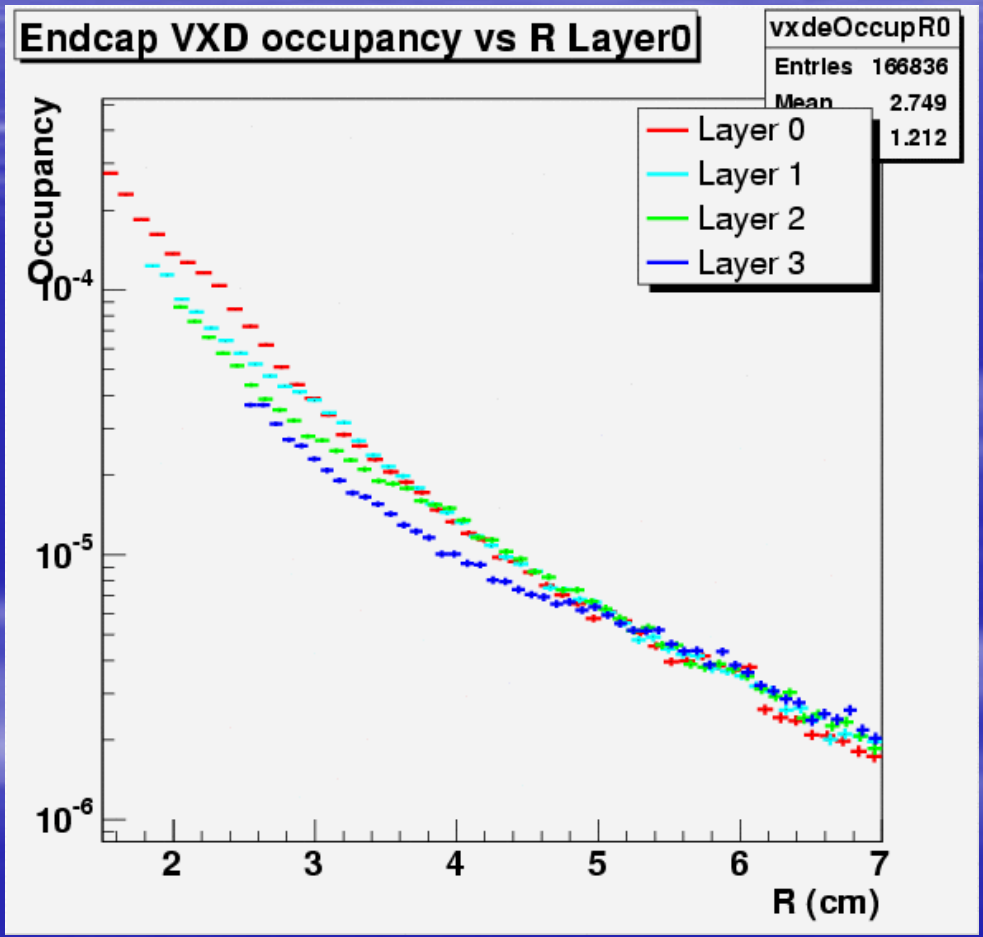

10^{-3} at inner radius

Occupancy with endplate

- Good news:

  Occupancy rate (~10^{-5} and 10^{-3} at inner radius) is not terrible.

  (Thanks to very fine granularity of CCD)
- Bad news:

  S/N ratio is very small.

  (Small number of signal tracks and most of backgrounds are e^+e^- pairs which are real tracks.)

  → How difficult detector understanding?

  How cost track finding?

  How pollute signal tracks?

Radiation damage per month

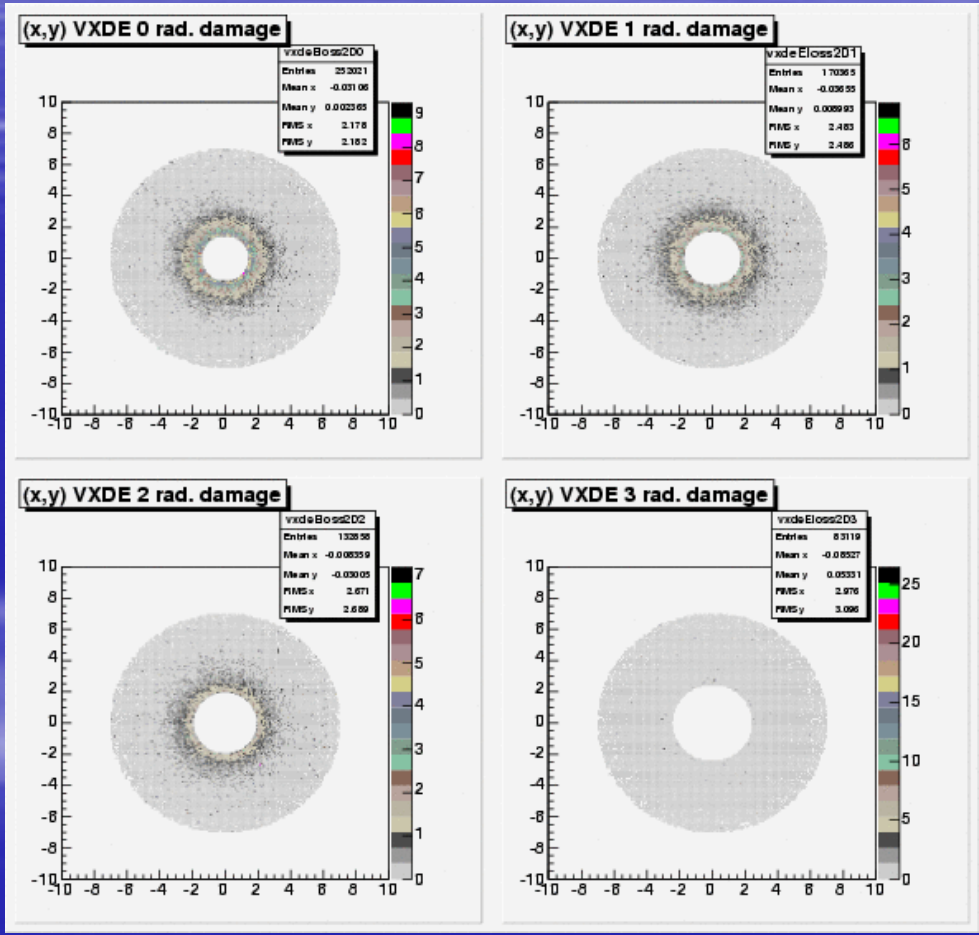

About ~5Gy/month at inner radius

How severe is it?

- I have collected opinions by two vertex detector experts.

1. First opinion : John → Green light.
2. Second opinion : Chris → Grey…

   (should be careful about machine environment, clock time, etc…)

- Currently we can not say 5Gy/month indicates green, yellow, or red light.

  We need more opinion about it.

Summary

- We just start a study of vertex detector with endcaps.
- The endcaps significantly contribute to improve impact parameter resolution and b-tag performance at forward region.
- The occupancy is not a problem but S/N ratio. (Is time stamp needed?)
- We are looking forward to hear expert's opinion about radiation damage.