LHCb Silicon Tracker electronics: from R&D to preproduction

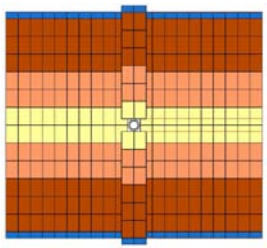

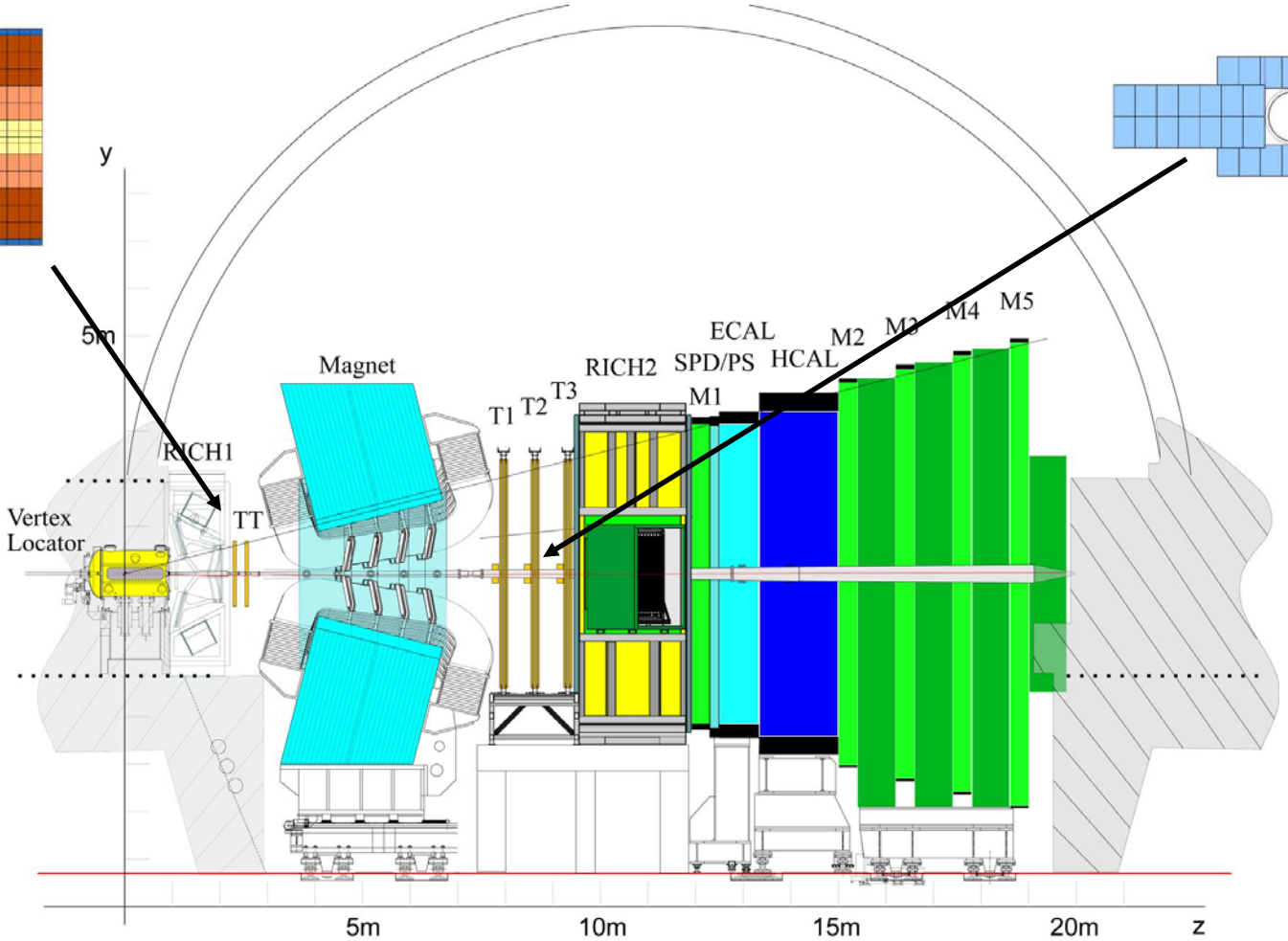

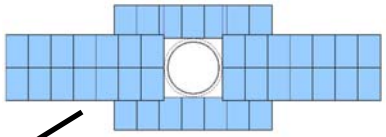

Silicon Tracker geometry

- Trigger Tracker:
  1 station @ 4 layers
  between RICH1 and magnet

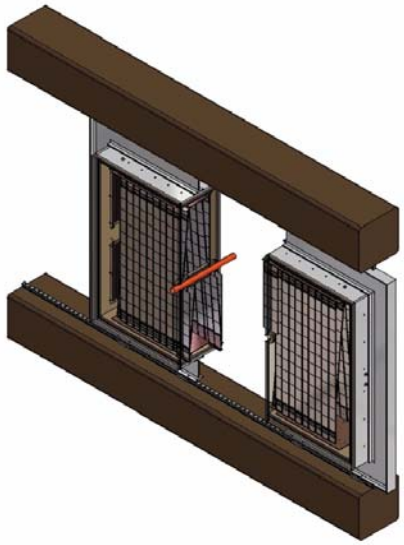

- Inner Tracker:
  3 stations @ 4 layers each
  around beampipe at stations T1-T3
  (between magnet and RICH2)

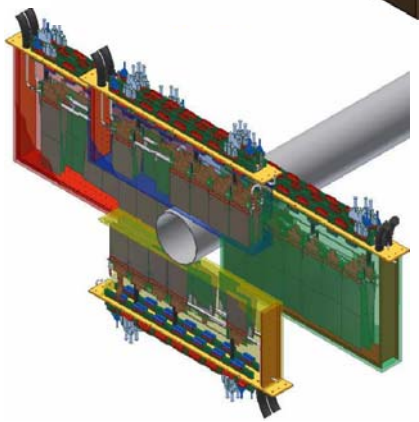

- Different geometry but same electronics!

Station overview

TT station

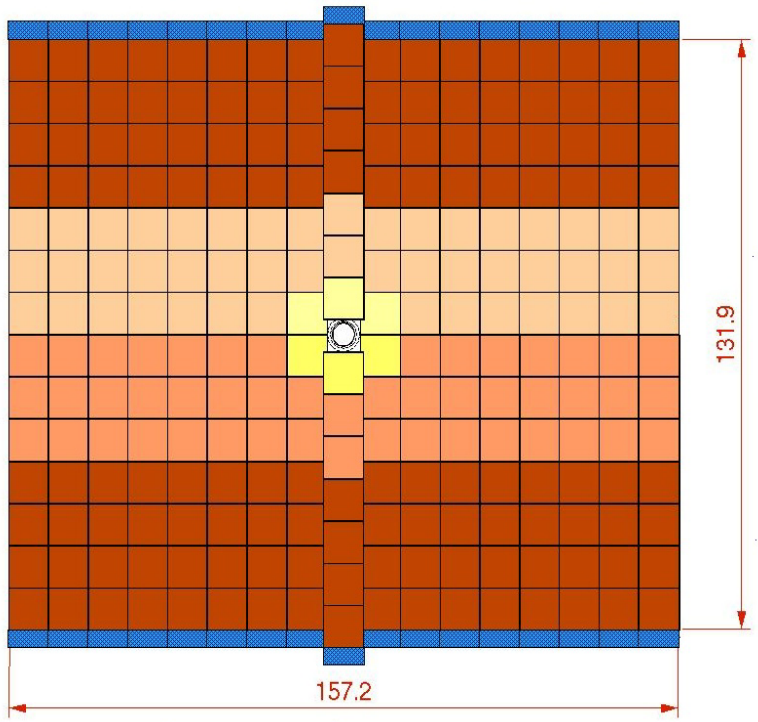

143k channels

IT station

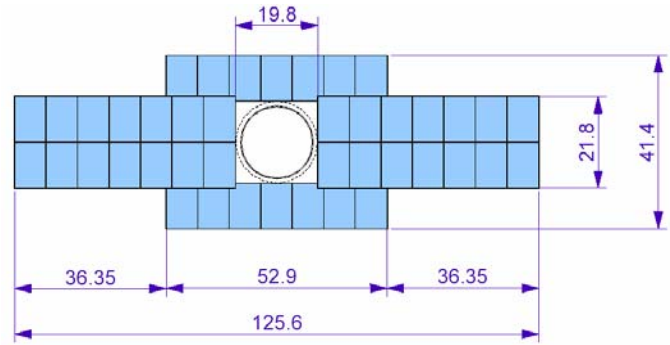

129k channels

TT Sensor layout

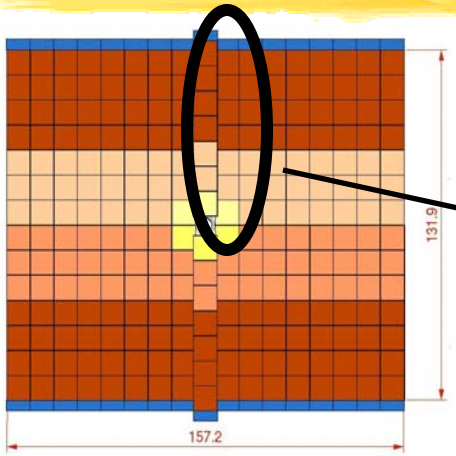

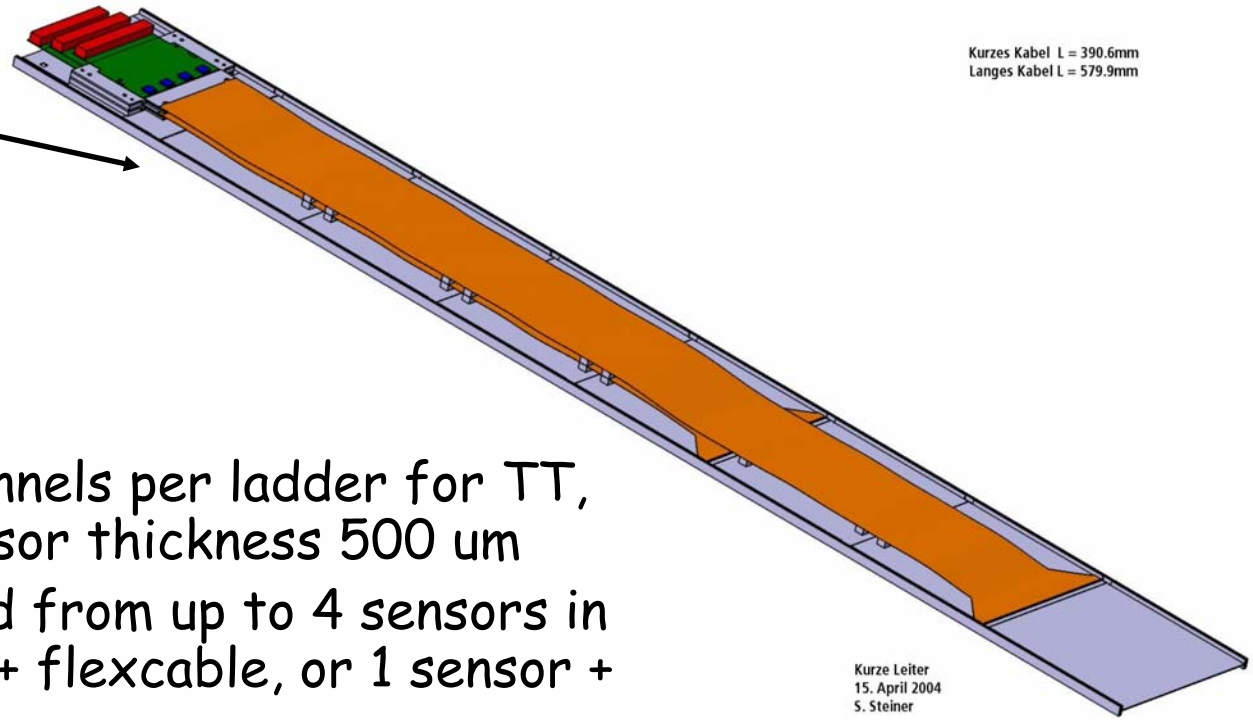

TT:

- 512 detector channels per ladder for TT, pitch 183 um, sensor thickness 500 um
- Ladders composed from up to 4 sensors in series, 3 sensors + flexcable, or 1 sensor + long flexcable
- Frontend hybrids located outside acceptance

Flexcable prototype

- 3 500 um sensors in series with 39 cm flexcable (Ctot = 38 pF)
- Included in CERN X7 testbeam in Summer 2004 with Beetle 1.3 hybrid
- Measured S/N 16.5, in agreement with capacitance calculations

IT sensor layout

IT:

- 384 detector channels per ladder for IT, pitch 198 um, sensor thickness 410 um (2-sensor module) and 320 um (1-sensor module)
- Frontend hybrids inside detector acceptance

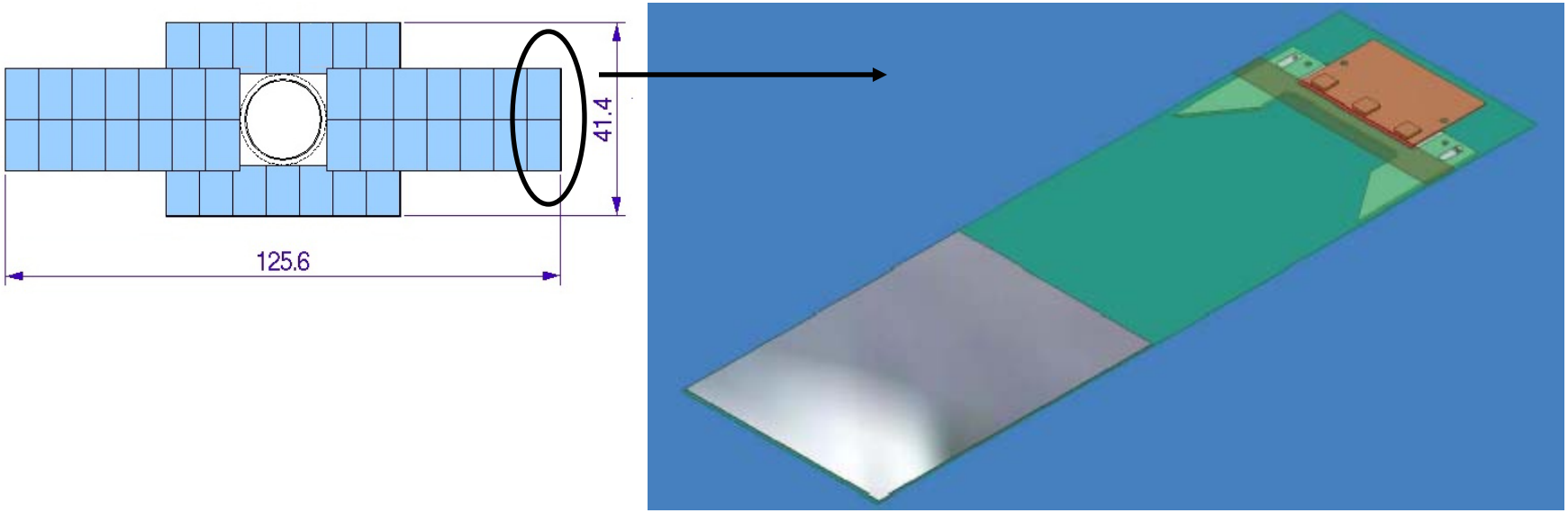

Beetle frontend hybrids

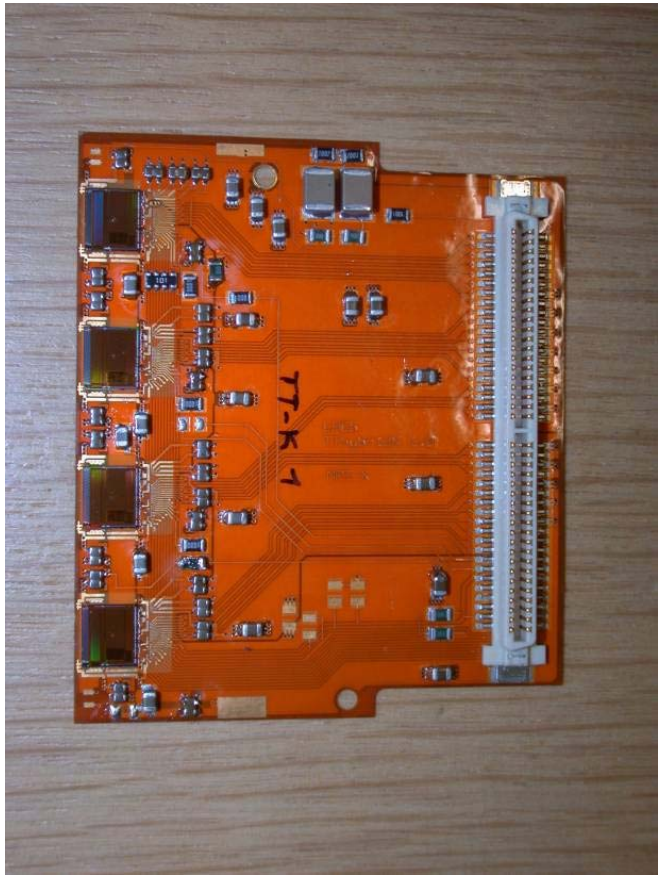

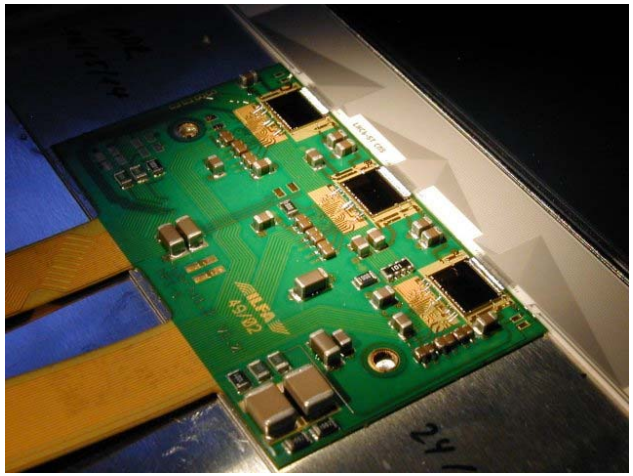

- 4-layer polyimide hybrid
- Beetle chip is only active device: 0.25 um CMOS, rad-hard design 128 channel charge integrator (see talk U. Trunk , session A3)
- 3 chip hybrid for IT (3x 128 ch)
- 4 chip hybrid for TT (4x 128 ch)

Digital optical readout link

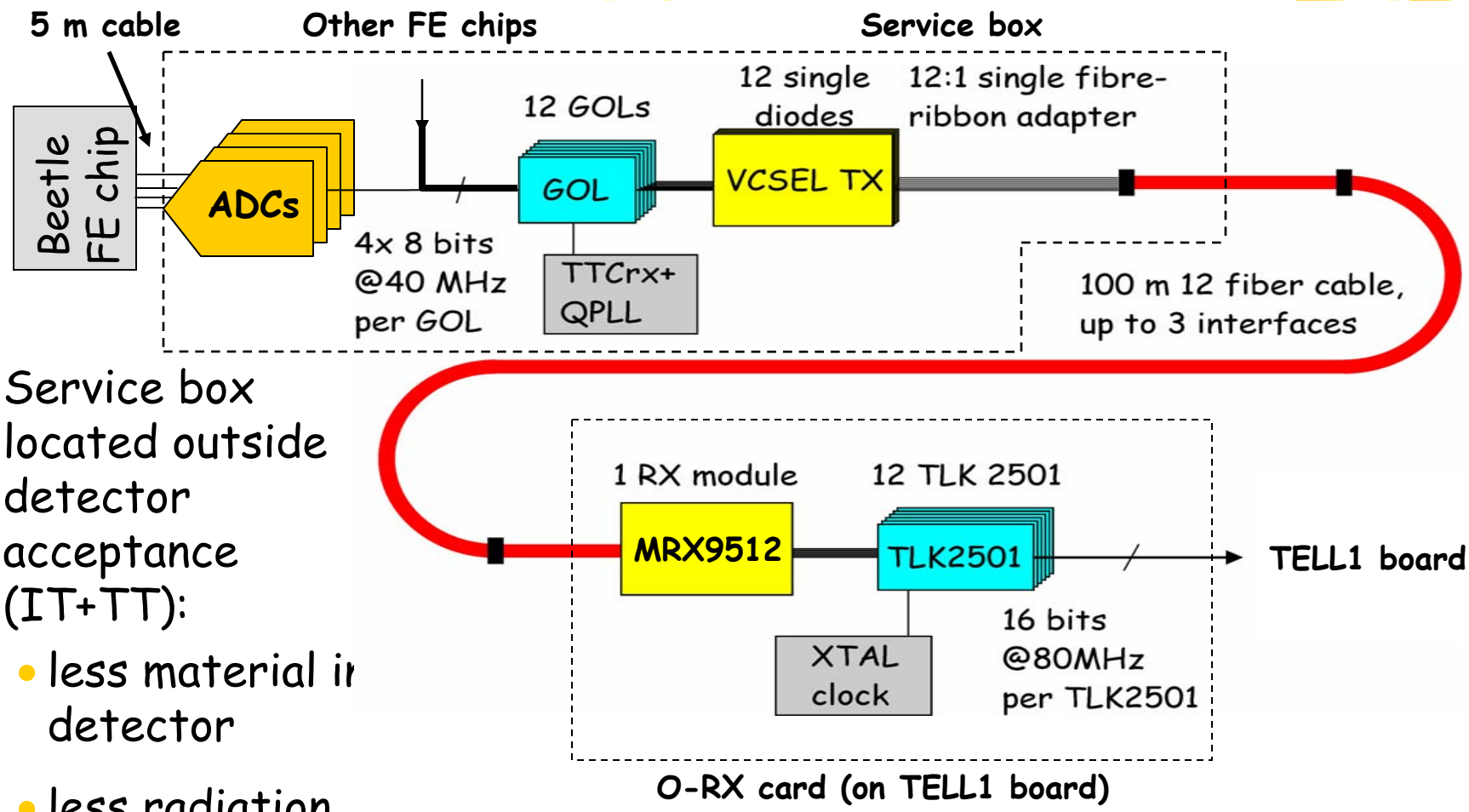

Service box located outside detector acceptance (IT+TT):

- less material in detector
- less radiation

Jumper- + SCSI cable

- Polyimide + SCSI cable (LSZH) used for first 5 m of transmission for lower radiation doses to the service box electronics

- Preliminary cable tests over show good performance of line receiver:
  eye pattern of 'quasi-digital' Beetle header

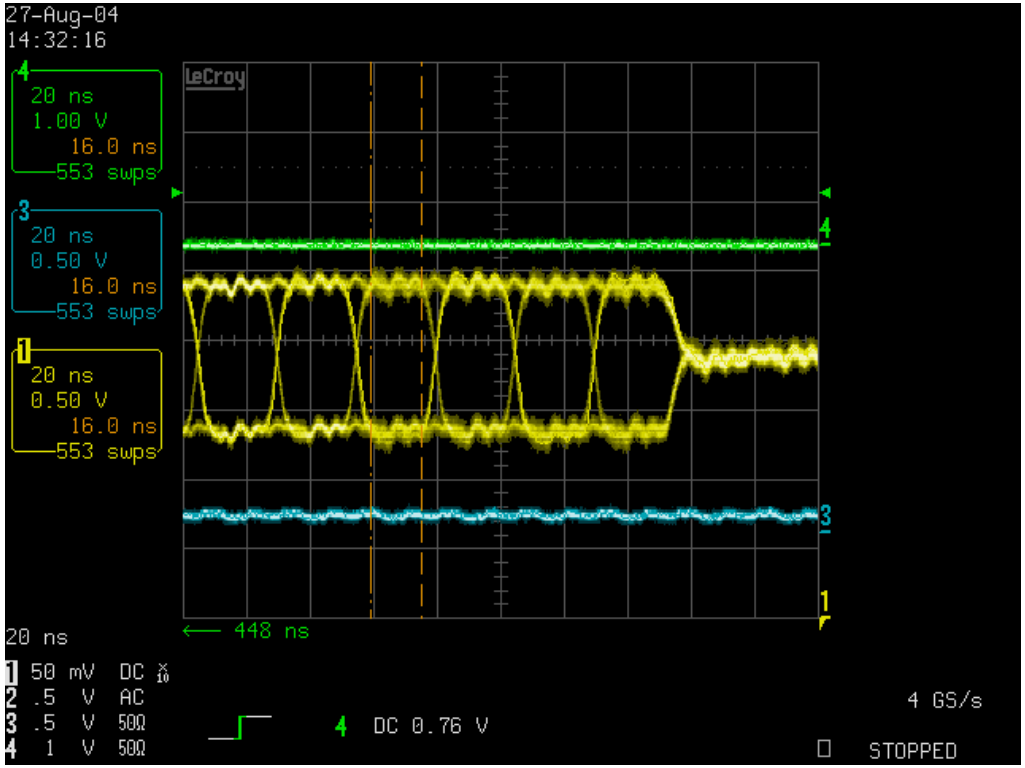

Digitizer Board

- Key element of Service box, size 328 x 140 mm2
- Only connection of any hybrid to the outside world
- Receives data from one sensor ladder (3 or 4 Beetle chips)

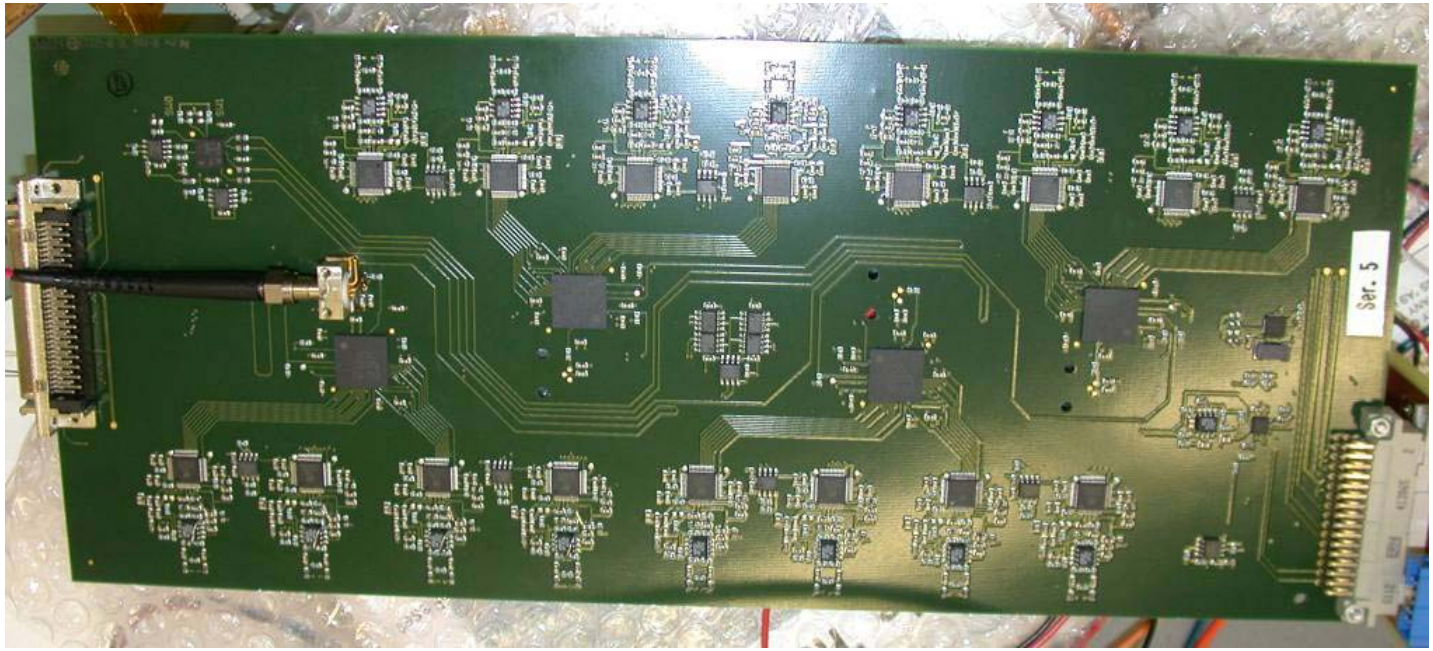

Digitizer Board systems

- Key components:
  - Differential line receiver
  - 8 bit 40 MSPS ADC
  - CERN GOL serializer
  - 2.5 Gbps VCSEL diode
- Additional components:
  - 1 QPLL chip for low-jitter clock generation close to GOLs
  - 1 DCU25F chip for environmental monitoring (voltages, temperatures)
    clock distribution
- Power, TTC signals, I2C slow control for hybrids are just passed through

Production of preseries

- PCB company and assembly company chosen, will remain fixed for later prodcution of full quantities
- 17 digitizer boards have been produced (will be used in module test setup)

- All BGA solder balls have been checked with X-ray to ensure reliable solder joints:
  no faulty solder joint among total of over 10000 balls
  → consider pad design compatible with BGA soldering

- electronic design will stay 99% identical (except for minor bugfixes)

Service box backplane

- Distribution of power, fast signals, slow control to digitizer boards
- Conservative design:
  4 layers, 6 mil technology
- Only active components are L4913 LHC pos. voltage regulators and LVDS clock IC's (tested to 70 krad)
- Easy cooling via flat water-cooled heatsink
- First prototypes (8 slots) being assembled, tests next week
- Full backplane with 20 slots

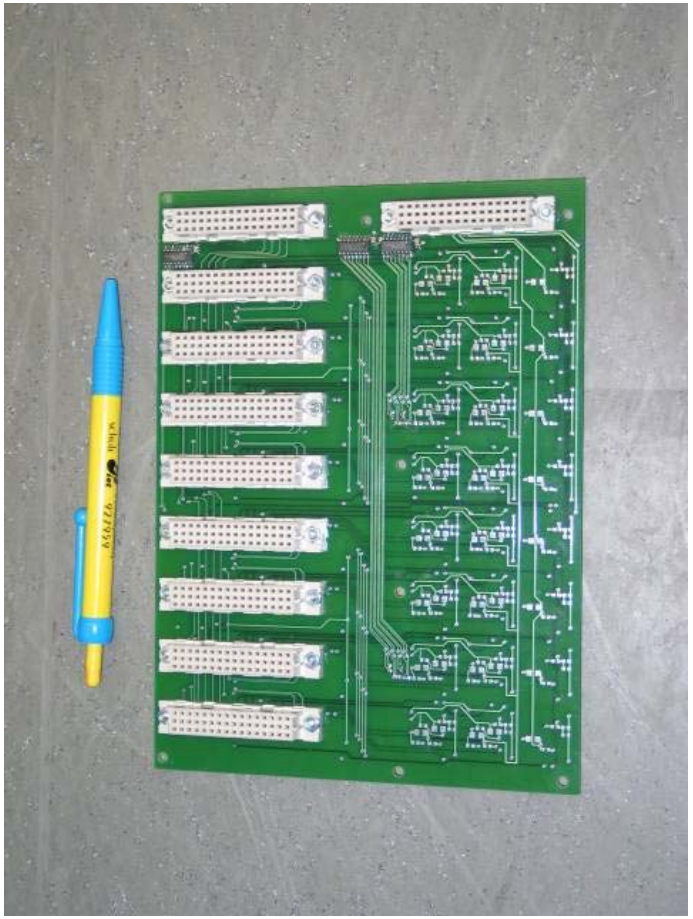

Control Card

- Under development by Universidade de Santiago de Compostela
- Provides TTC signals and slow control interface of each Service box
- Same size as Digitizer Board to fit into crate
- Main components:
  - 1 TTCrq mezzanine
  - 2 SPECS slaves for slow control (I2C, temperature/humidity readout)

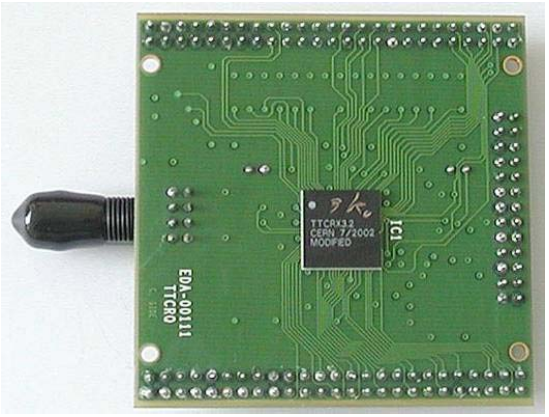

TTCrq (CERN)

SPECS slave (Orsay)

Radiation qualification

- Expected radiation levels at service box location:
  <15 krad, <2E12 n/cm2 (1 MeV n eq.) for 10 year LHC running
- AD8129 line receiver tested up to 300 krad, 2E14 n/cm2
- TSA0801 ADC tested up to 60 krad (analogue and SEE test)
- ULM-Photonics VCSEL tested up to 300 krad, 3.6E12 n/cm2
- Fibre tested up to 2.2 Mrad
- (CERN GOL, QPLL, DCU25F tested to several Mrad)

- No failures of components
- Only slightly decreased performance measured for line receiver and optical fibre, well within system design margins
- All components qualified for use in service box

Optical power budget

Min. laser power into fibre:	-5.0	dBm
Max. Fibre attenuation 100 m:	0.5	dB
3 optical cable interfaces max. 0.5 dB per interface:	1.5	dB
Worst case average power at receiver:	-7.0	dbm
Worst case optical sensitivity SNAP12 receiver:	-16.0	dBm
Power margin:	9.0	dB

O-RX card (Uni Heidelberg)

- Common LHCb effort lead by Physikalisches Institut, University Heidelberg
- Optical input directly compatible to used MTP fibre (SNAP12 compatible multi-channel receiver, 2.5 Gbps)
- 12x TLK2501 deserializer
- LHCClk x2 crystal oscillator on board
- Preseries of 28 ordered, expected for October

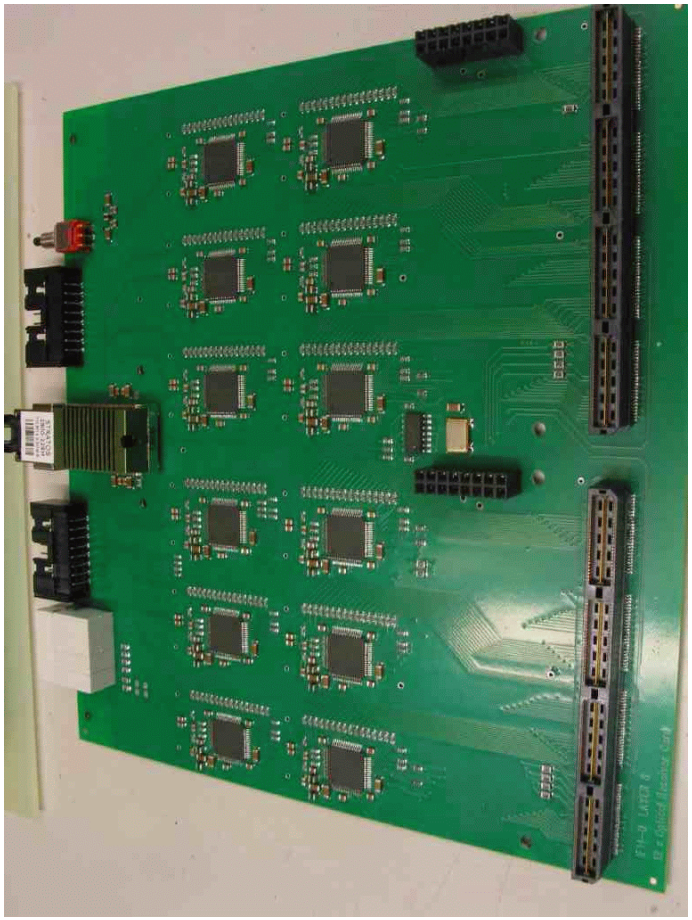

BER testing, eye pattern

- Dirk Wiedner (Heidelberg) made BER testing with pseudorandom data
- 3 days continous running (4E14 bits) without a single error

- Check eye pattern of optical signal with 5 GHz opto-electric converter: clean open eye

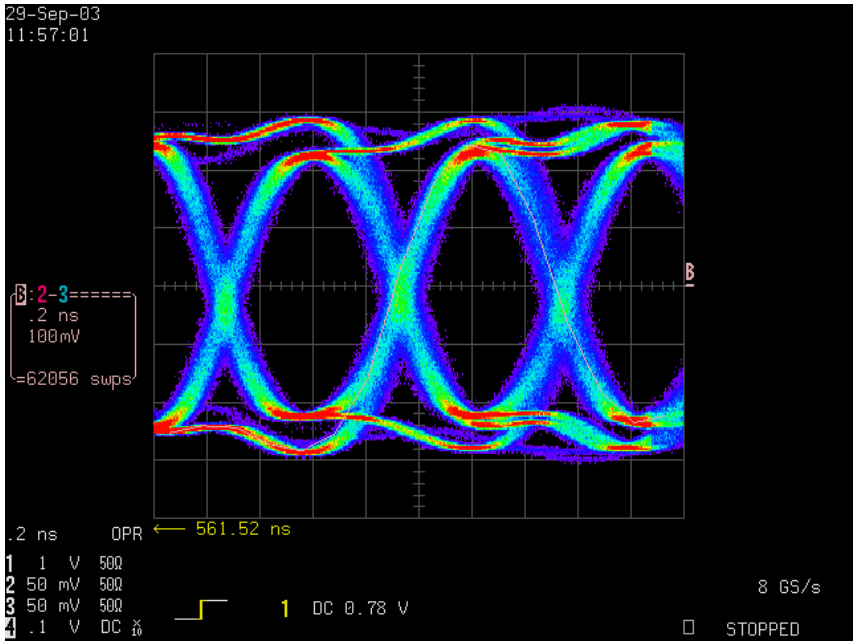

TELL1 board (EPF Lausanne)

Cluster finding, L1 derandomizer

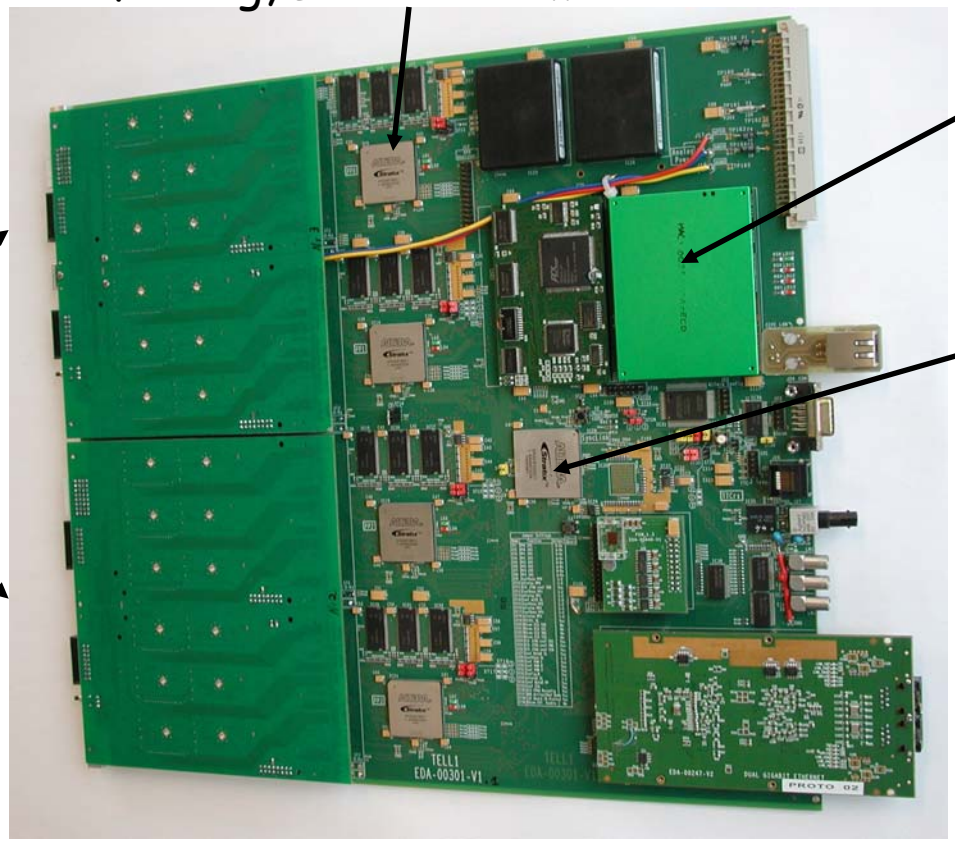

Credit Card PC

2 optical cables, 38 Gbit/s input bandwidth

Data synchronizing and packing

2.4 Gbit/s output to CPU-farms

Common LHCb Effort, lead by EPF Lausanne, preseries expected until end of the year

Conclusion + Outlook

- Silicon sensors chosen and production lot ordered, first batches arrive Jan 2005
- R&D for LHCb Silicon Tracker electronics complete
- First round of preseries in production
- Testing of full readout chain (detector + readout link + LHC timing hardware) in mechanical mock-up of TT station with pre-production hardware planned until end of the year
- Series production for electronic modules will start in Q2/2005

ADC TID testing

- TID Testing performed by injecting 5 MHz sinewave close to full scale and doing FFT analysis of digitized signal
- Plot SFDR and SNR for duration of irradiation, idea: any unlinearity will show up in SFDR, any gain loss in SNR

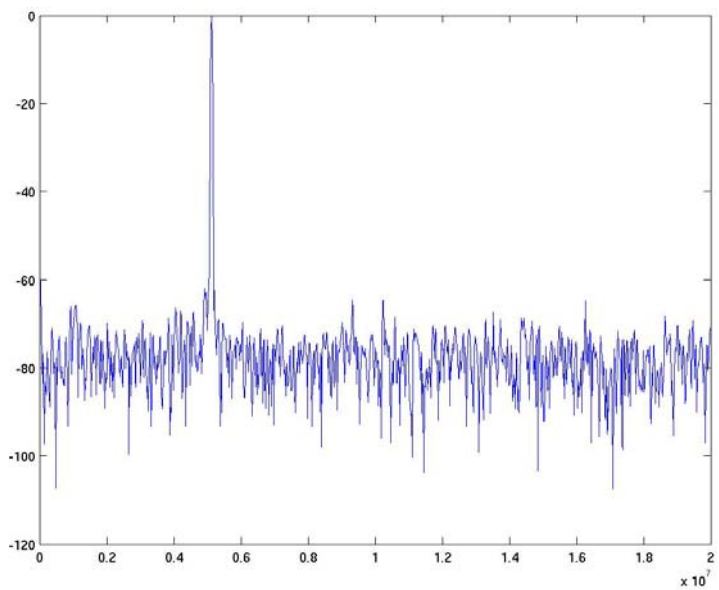

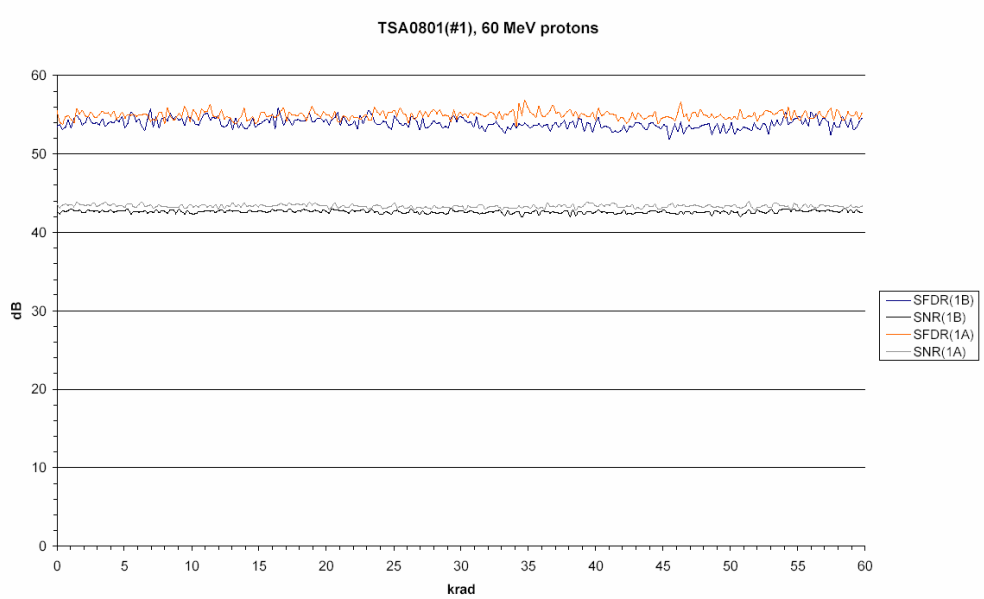

ADC SEE testing

- One ADC was connected to high limit (all '1' at output), and one ADC to low limit (all '0')
- Both bytes were tested with logic gates in real time
- For each bit flip: output pulsed, connect output to counter

- All ADCs irradiated to 4.6E11 p/cm2
- For the complete campaign (4 ADC10040, 4 TSA0801), one 1 SEU was found ('1' to '0')